autocontrol
process instrumentation

www.autocontrolpi.com

SINGLE BLOCK & BLEED MONOFLANGE

MODEL C6.04

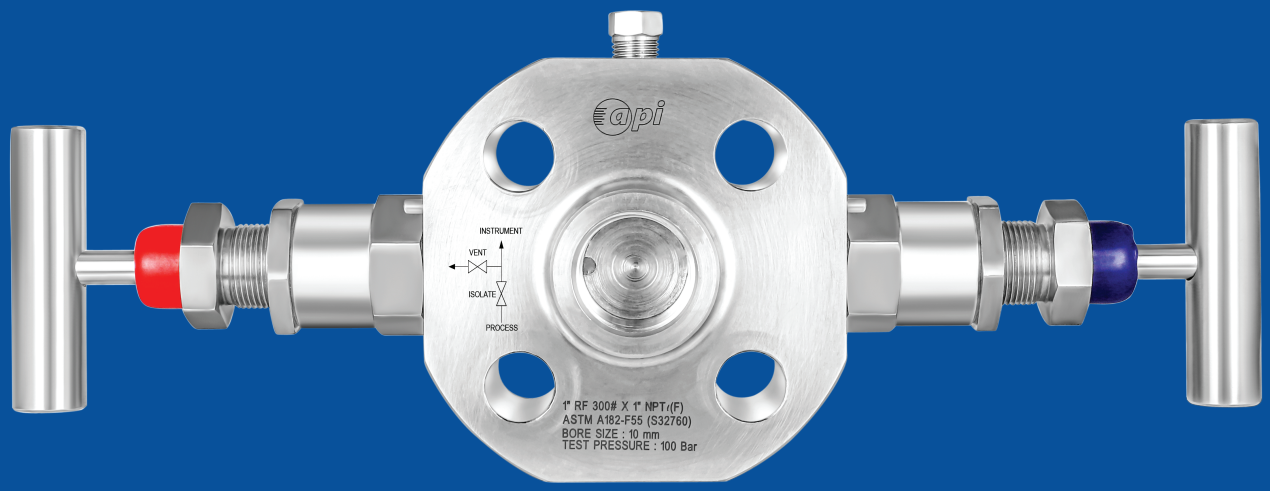

PRODUCT DESCRIPTION

Single block and bleed valves are used to achieve positive isolation when performing maintenance activities in a live process plant. Typically one block valve and a bleed valve are manufactured as a single assembly and this block and bleed valve manifold can be readily installed for isolation purpose.

SINGLE BLOCK & BLEED MONOFLANGE

MODEL C6.04

KEY FEATURES

- One Isolate + One vent
- Direct mounting
- Back seat to prevent blow out

APPLICATION

- Isolation of pressure gauges, switches & transmitters
- High pressure line shut off
- Liquid & gas services

SPECIFICATIONS

Mounting	:	Direct
Max. Working Pressure	:	6000 psi (413.7 bar) 10000 psi (689.4 bar)
Max. Working Temp.	:	240°C
Instrument Connection	:	½" NPT (F)
Process connection	:	1" RF 150# as per ANSI B16.5
Vent Port	:	¼" NPT (F), plugged

MATERIAL OF CONSTRUCTION

Tip Material	:	SS 316
Wetted Parts	:	SS 316
Stem packing	:	PTFE, Graphite, Peek
Stem	:	Conical metal tip
'T' bar handle	:	SS 304

Packing Material Vs Temperature Rating

PTFE	:	6000 psi @ 100˚C
		3000 psi @ 200˚C
Graphite	:	6000 psi @ 200˚C
		3000 psi @ 430˚C

FLOW DIAGRAM

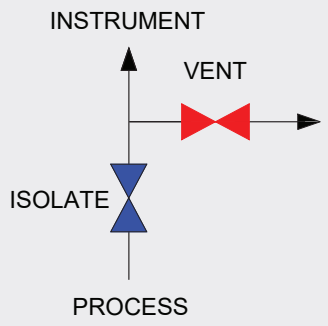

Important Notes: Above drawings are not to scale. All Dimension are in mm

SINGLE BLOCK & BLEED MONOFLANGE

MODEL C6.04

DIMENSIONAL DRAWINGS

Bonnet : Standard version

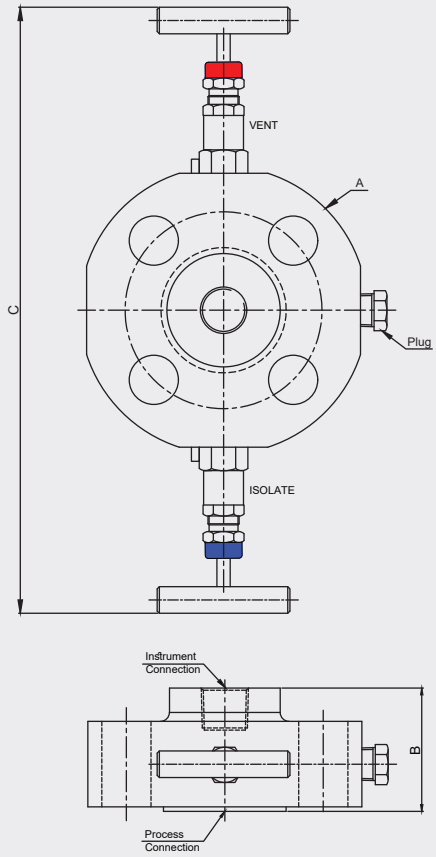

Bonnet : Anti-tapmer version

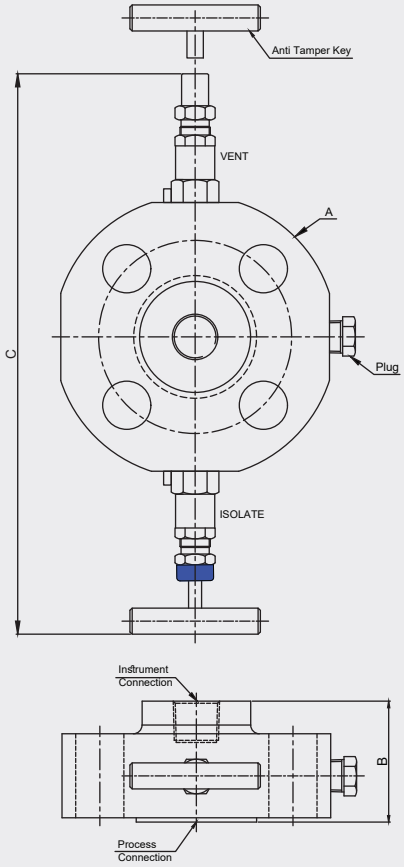

Flange NS	Flange Rating																			
	Class 150				Class 300				Class 600				Class 900/1500				Class 2500			
			Standard Version	Anti Tamper			Standard Version	Anti Tamper			Standard Version	Anti Tamper			Standard Version	Anti Tamper			Standard Version	Anti Tamper
	ØA	B	C	C	ØA	B	C	C	ØA	B	C	C	ØA	B	C	C	ØA	B	C	C
½"	90	45	230	210	95	45	235	215	95	50	235	215	120	50	260	240	135	50	275	225
¾	100	45	240	220	115	45	255	235	115	50	255	235	130	50	270	250	140	50	280	260
1"	110	45	250	230	125	45	265	245	125	50	265	245	150	50	290	270	160	50	300	280
1½"	125	50	265	245	155	50	295	275	155	55	295	275	180	55	320	300	205	55	345	325
2"	150	50	290	270	165	50	305	285	165	60	305	285	215	60	350	330	235	60	375	355

Important Notes: • Above drawings are not to scale • All Dimension are in mm

SINGLE BLOCK & BLEED MONOFLANGE

MODEL C6.04

MODEL CODING & ORDERING INFORMATION

DESCRIPTION	CODE	C6.04	D	S4	PT	12BF	XXX	RF	14NF	X17
Model										
Single Block & Bleed Monoflange	C6.04	C6.04								
Type										
Direct	D		D							
Wetted Material										
SS 304	S4			S4						
SS 316	S6									
SS 316L	SL									
316/316L SS Dual Certified	DC									
Monel 400	M4									
Hast C-276	HC									
Carbon steel	CS									
Inconel 625	I5									
Inconel 825	I2									
Duplex 2205	DU									
Super Duplex 2507	SD									
Packing										
PTFE	PT				PT					
Graphite	GR									
Instrument Connection										
½" BSP (F)	12BF					12BF				
½" NPT (F)	12NF									
M20 × 1.5 (F)	M20F									
¾" BSP (F)	34BF									
¾" NPT (F)	34NF									
1" BSP (F)	25BF									
1" NPT (F)	25NF									
Process Connection										
Ref Table – 1	XXX						XXX			
Flange Facing										
Raised face	RF							RF		
Ring type joint	RT									
Vent Port										
¼" NPT (F)	14NF								14NF	
½" NPT (F)	12NF									
¾' NPT (F)	34NF									
Other Options										
Material Test Certificate	X17									X17
Tested to NACE Standard	X20									
Certification for Oxygen service	X21									
Anti-tamper key	X52									
Hydro test certificate	X53									

SINGLE BLOCK & BLEED MONOFLANGE

MODEL C6.04

Table –1 AS PER ANSI B 16.5

NOMINAL SIZE	RATING/ CLASS	CODE	NOMINAL SIZE	RATING/ CLASS	CODE	NOMINAL SIZE	RATING/ CLASS	CODE	NOMINAL SIZE	RATING/ CLASS	CODE
1/2″	150	B09	1″	150	B21	1 1/2″	150	B33	2 1/2″	150	B45
	300	B10		300	B22		300	B34		300	B46
	600	B11		600	B23		600	B35		600	B47
	900	B12		900	B24		900	B36		900	B48
	1500	B13		1500	B25		1500	B37		1500	B49
	2500	B14		2500	B26		2500	B38		2500	B50
3/4″	150	B15	1 1/4″	150	B27	2″	150	B39	3″	150	B51
	300	B16		300	B28		300	B40		300	B52
	600	B17		600	B29		600	B41		600	B53
	900	B18		900	B30		900	B42		900	B54
	1500	B19		1500	B31		1500	B43		1500	B55
	2500	B20		2500	B32		2500	B44		2500	B56

SAMPLE ORDERING CODE:

C6.04.D.S4.PT.12BF.XXX.RF.14NF.X17

Note: Specifications and dimensions given in this product catalogue represents the state of engineering at the time of printing. Modifications may take place and material specified may be replaced by others without prior notice.